Lecture 7: Sequence Detector, Traffic Light Control, FPGA and CPLD

By: Emad Samuel Malki Ebeid

Summary of lecture 6

- Moore

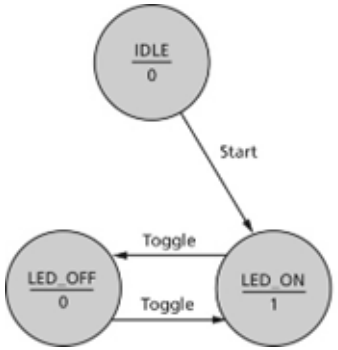

- Mealy

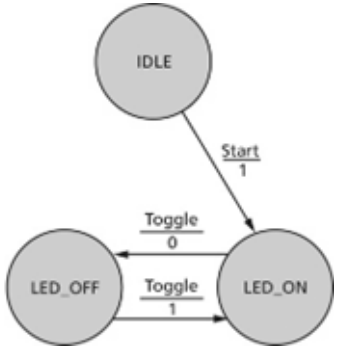

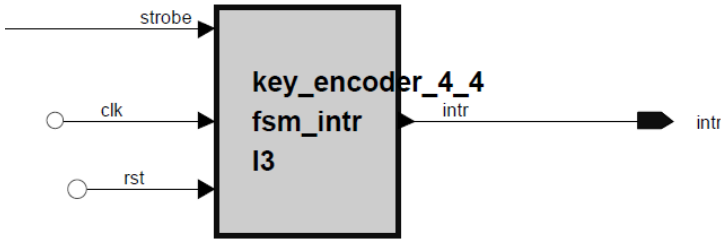

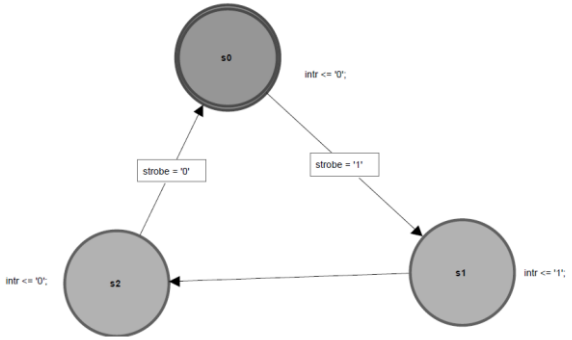

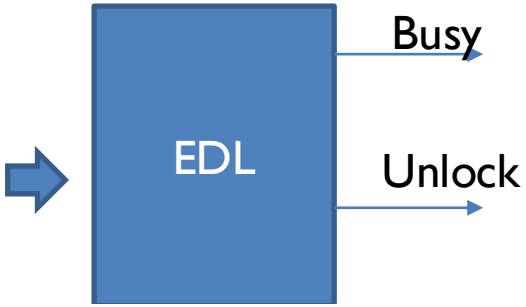

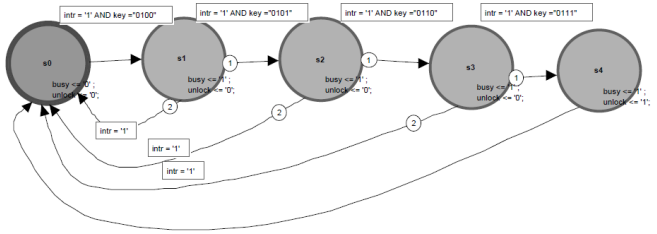

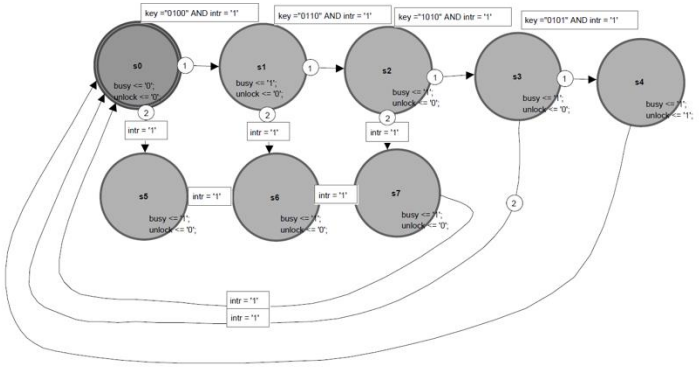

Summary of lecture 6

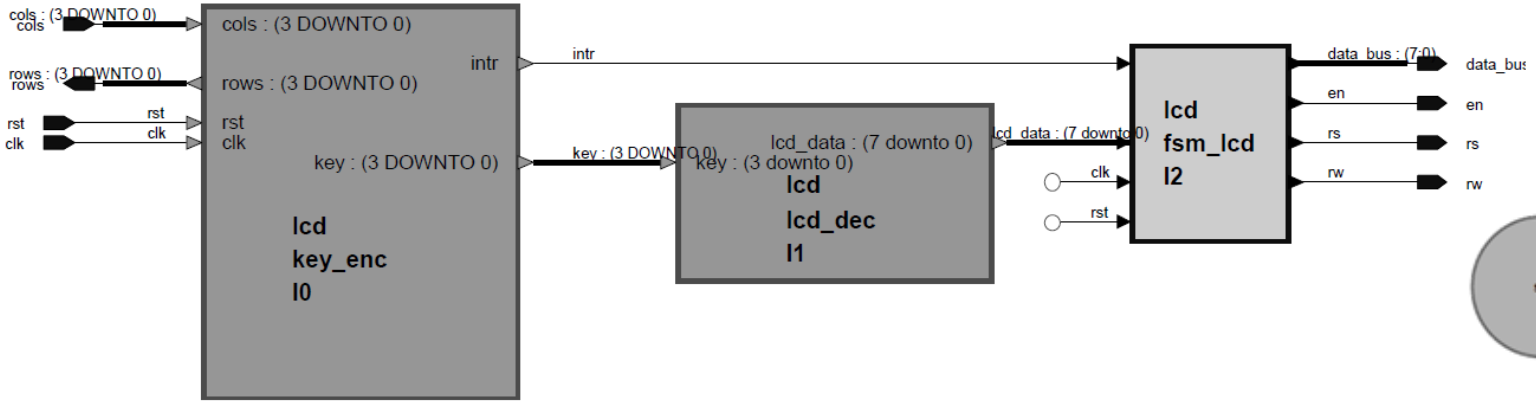

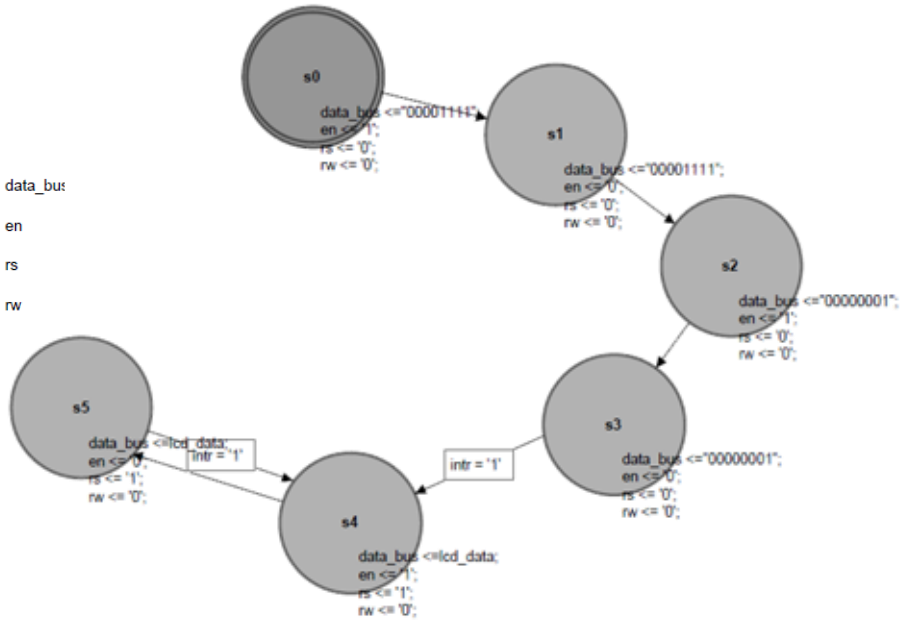

Sequence Detector

- It detects a data sequence in a data stream
- Two types:
  - Nonoverlapping sequence: if the sequence is not detected, it restarts

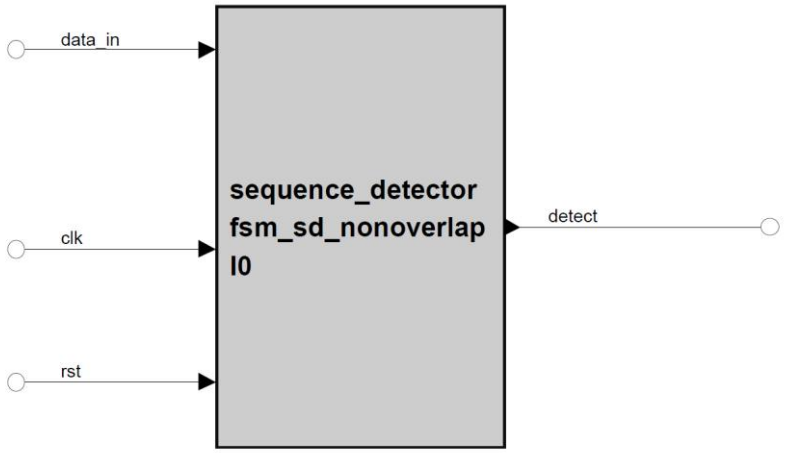

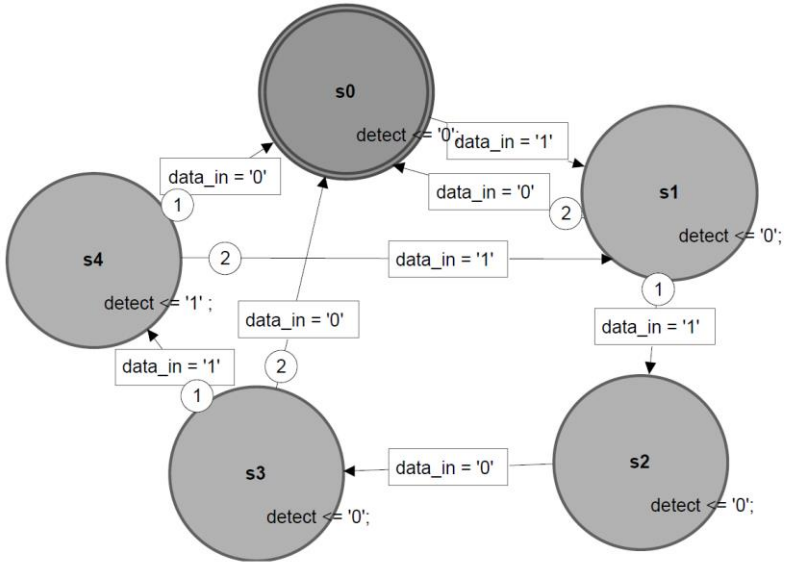

Sequence Detector

- Overlapping sequence: ot detects the sequence without restarting

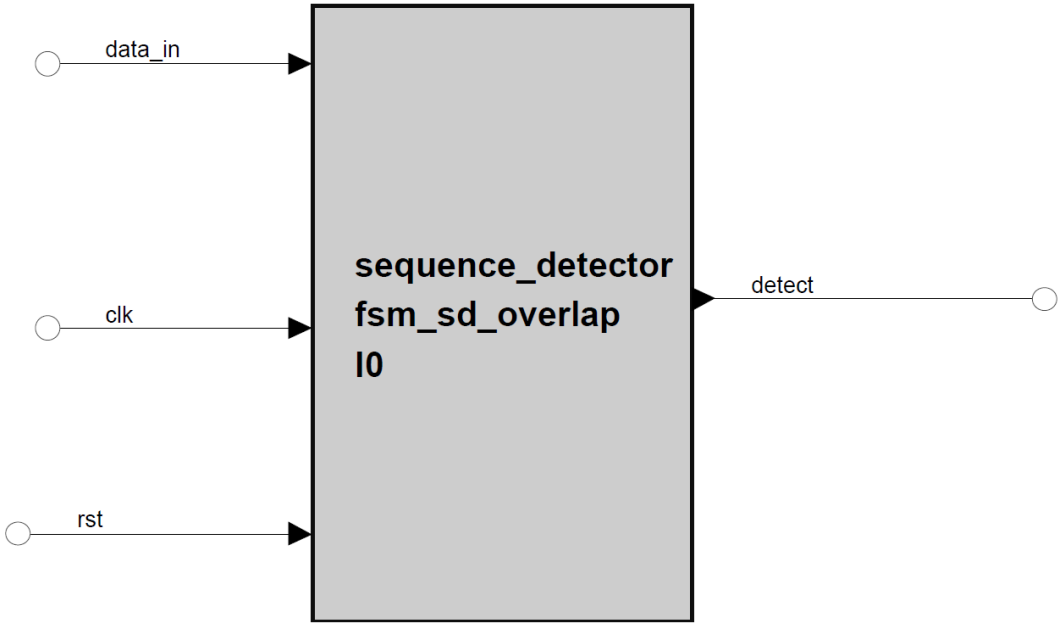

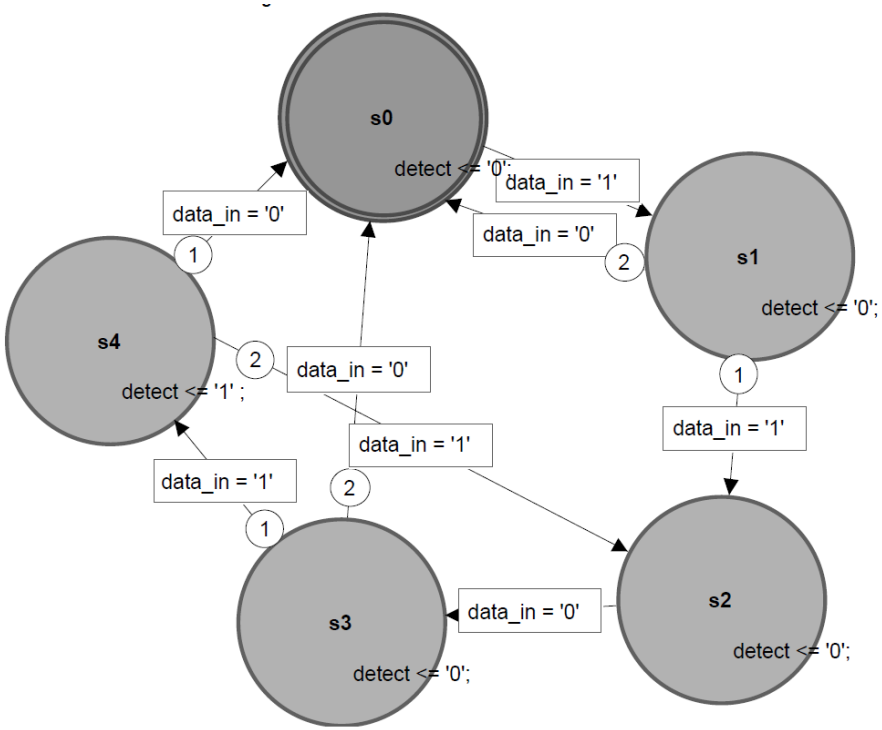

Traffic Light Control

- Green always ON until Start
- Yellow ON for 4 clk cycles
- Red ON for 16 clk cycles

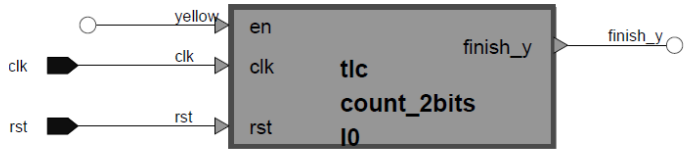

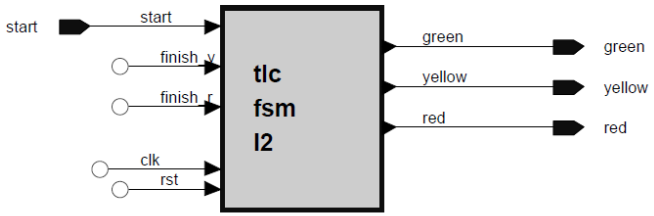

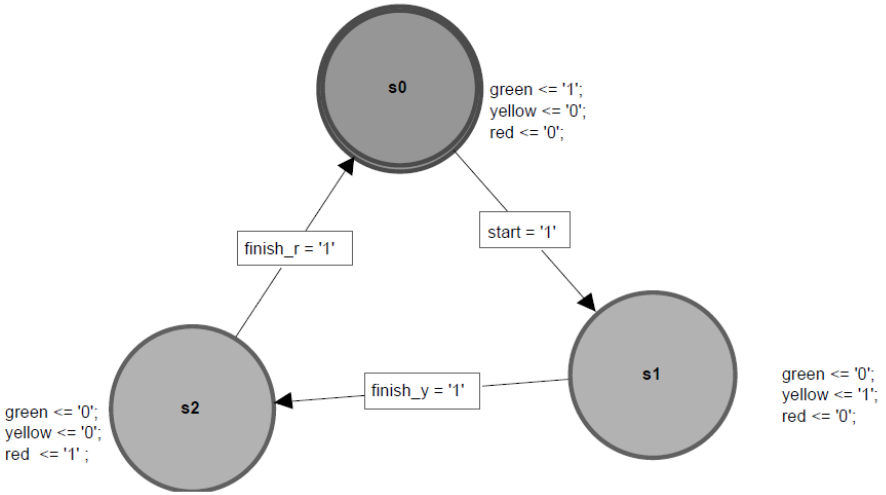

Random counter

- Think about building a counter using FSM that counts 3,1,2,0,3,1,2,0, etc.
- 15 minutes group work
  - Discuss also building a normal 4_bits counter using FSM

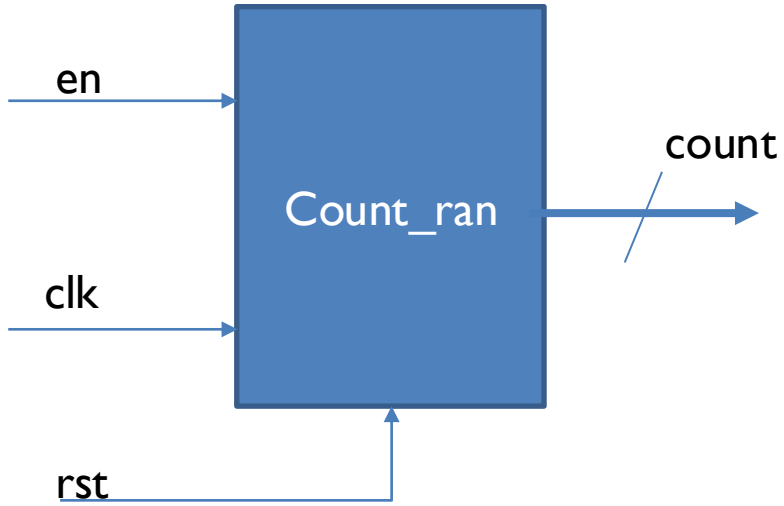

Edge Computer Performance

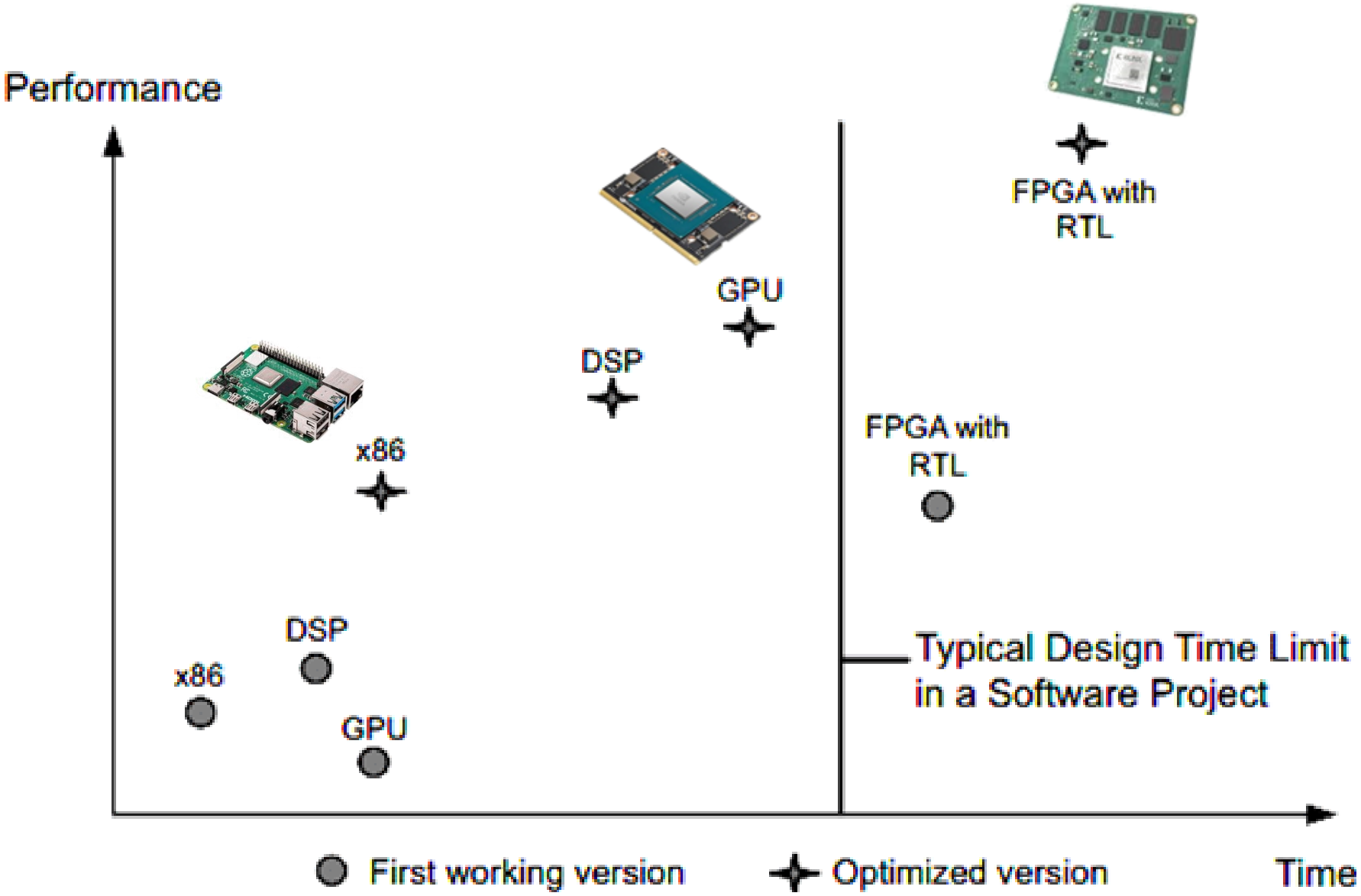

FPGA

- Field Programmable Gate Array (FPGA) is an integrated circuit containing gate matrix which can be programmed by the user "in the field" without using expensive equipment.
- An FPGA contains a set of programmable logic gates and rich interconnect resources, making it possible to implement complex digital circuits.
- FPGA devices are produced by a number of semiconductor companies:
  - Xilinx, Altera, Actel, Lattice, QuickLogic and Atmel.
- Configuration bitstream can be stored in FPGA using various technologies.
  - The majority of FPGAs is based on SRAM (Static RAM).

FPGA

- The general FPGA architecture consists of three types of modules. They are I/O blocks or Pads, Switch Matrix/ Interconnection Wires and Configurable Logic Blocks (CLB).

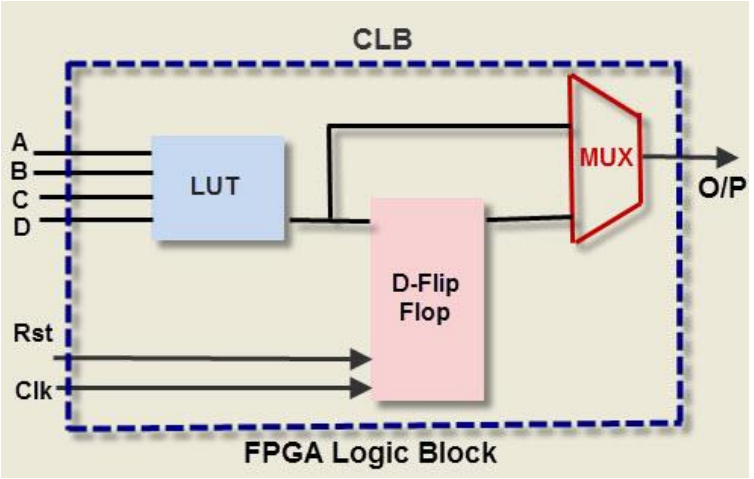

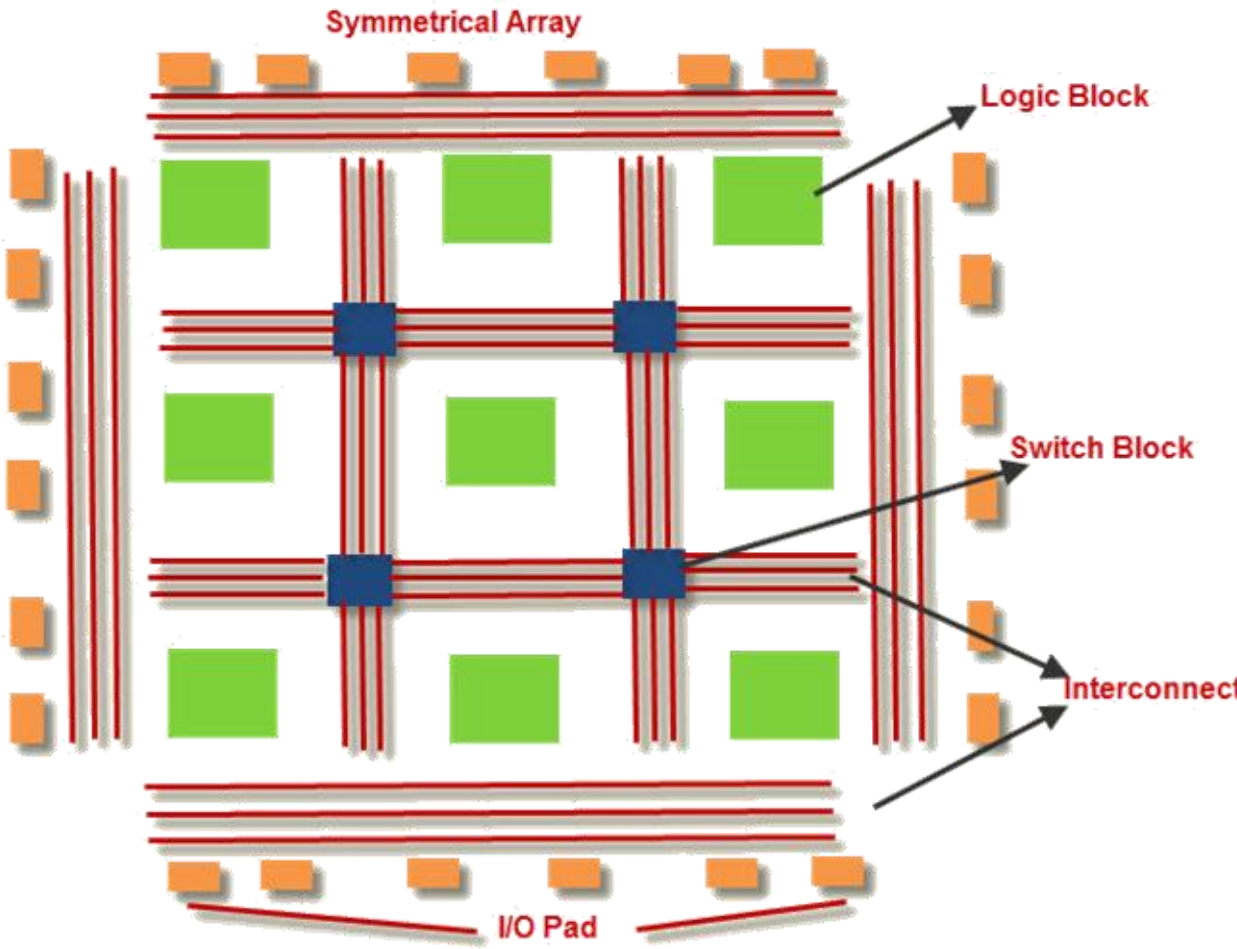

Memory cells: RAM

RAM is a **volatile** memory that the data is eventually lost when the memory is not powered

SRAM: Static random-access memory

- Speed ↑ size (bigger (6 MOSFETs))
- Cache memory
- Low power consumption
- 3 Operation States:
  - hold (WL=0), write & read (WL=1)

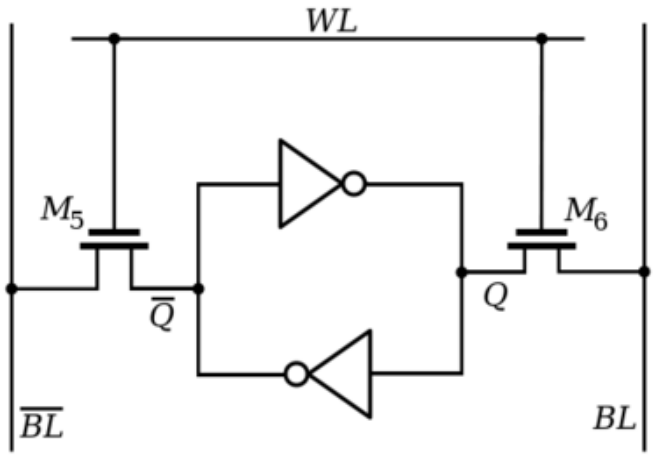

DRAM: Dynamic random-access memory

- Speed ↓ size (smaller (one MOSFET))
- Main memory
- Charge leakage
- High power consumption
- Refreshed frequently (few milliseconds)

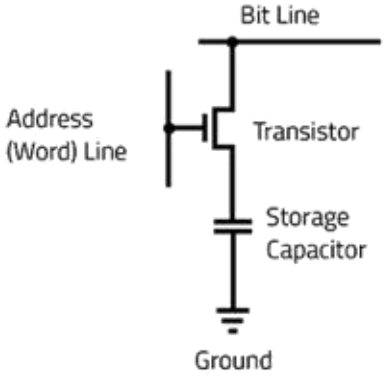

Single Memory Cell

SRAM-based FPGAs

- It stores logic cells configuration data in the static memory
- Since SRAM is volatile, the FPGAs must be programmed (configured) upon start
- There are two basic modes of programming:
  - **Master mode**, when FPGA reads configuration data from an external source, such as an external Flash memory chip.
  - **Slave mode**, when FPGA is configured by an external master device, such as a processor (via a dedicated configuration interface or via a boundary-scan (JTAG) interface).
- SRAM-based FPGAs with an internal flash memory:
  - it contains internal flash memory blocks, thus eliminating the need to have an external non-volatile memory. It uses flash only during startup to load data to the SRAM configuration cells.

Programmable switch FPGAs

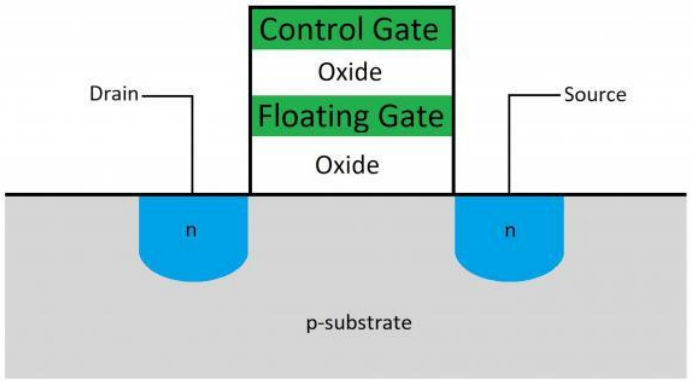

- It uses flash as a primary resource for configuration storage, and doesn't require SRAM
- Switch is a floating-gate transistor that can be turned off by injecting charge onto its floating gate
- It has a limit number of reprogramming
- More secure than SRAM-FPGA

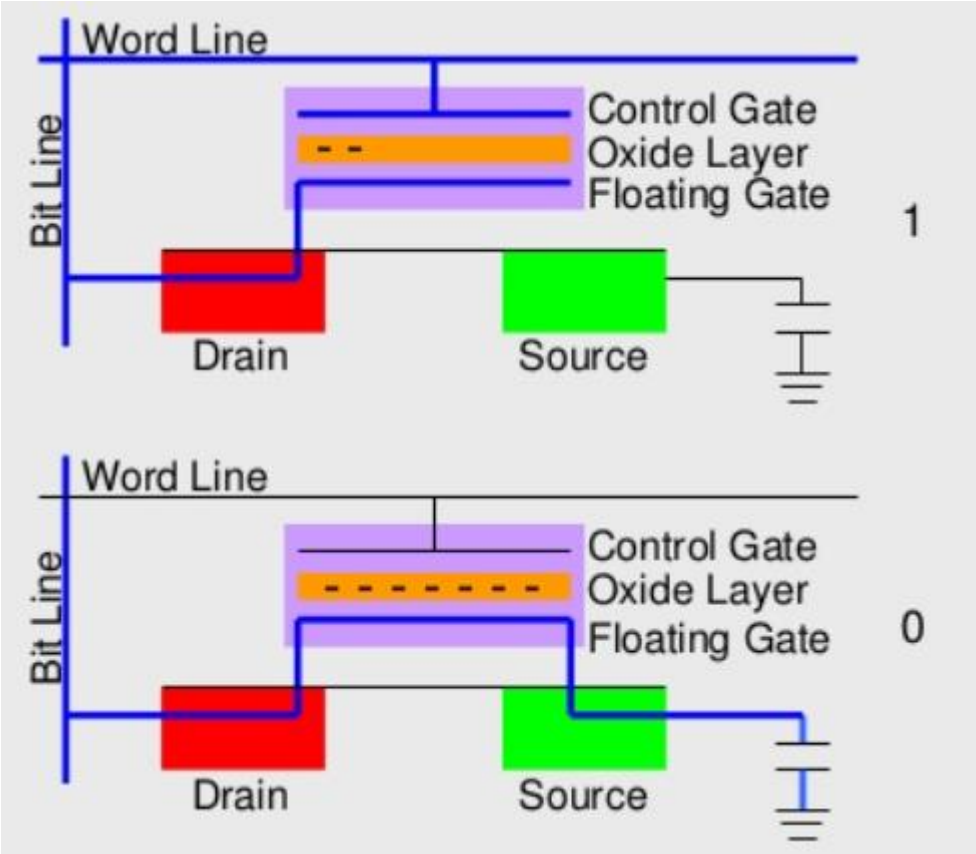

Fuse-based FPGA

- One time program (OTP) FPGA
- The fuse makes or breaks link between two wires
- More secure than SRAM (no load from an external device)
- In high radiation environments (space or nuclear reactors), radiation events can cause SRAM, that contains the program, to change state but not in fused FPGA.

Programmable switch matrix

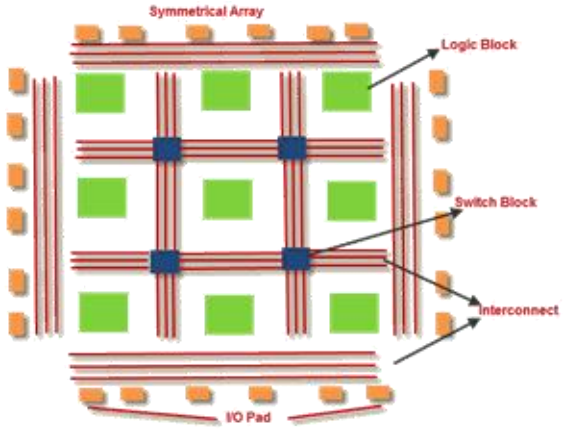

- All internal connections are composed of metal segments with programmable switching points and switching matrices to implement the desired routing.

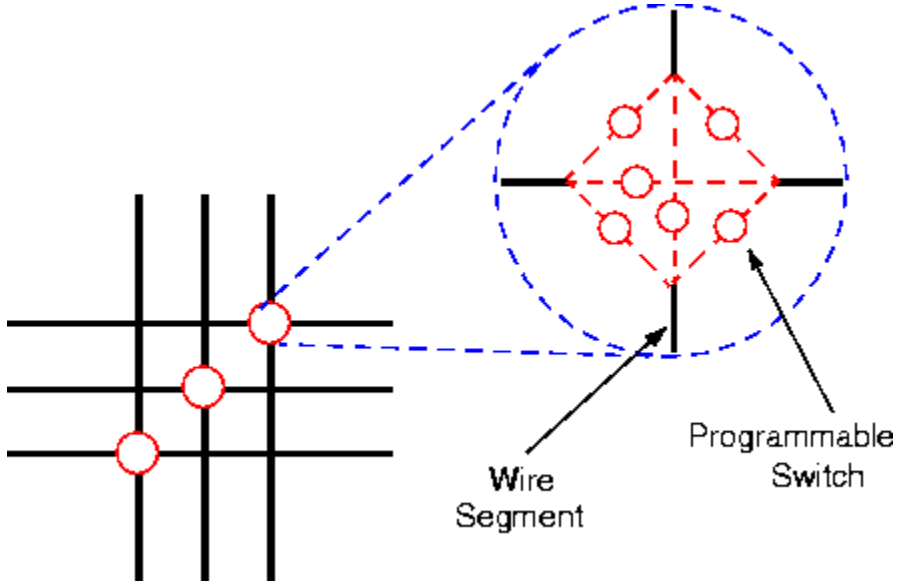

Example: FPGA programming

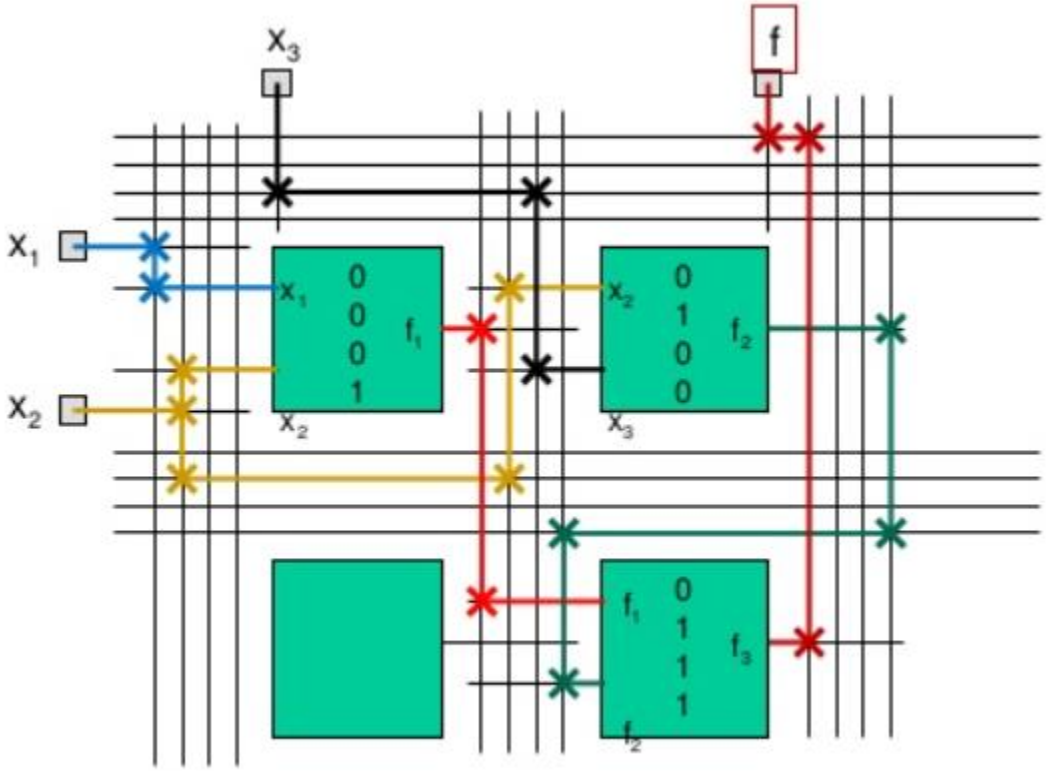

$$f_1 = x_1 x_2$$

$$f_2 = \overline{x_2} x_3$$

$$f = x_1 x_2 + \overline{x_2} x_3$$

Other FPGA Building Blocks

- Clock distribution: element clock skew
- Embedded memory blocks
- Special purpose blocks:
  - DSP blocks: Hardware multipliers, adders and registers
  - Embedded microprocessors/microcontrollers
  - High-speed serial transceivers

Design flow

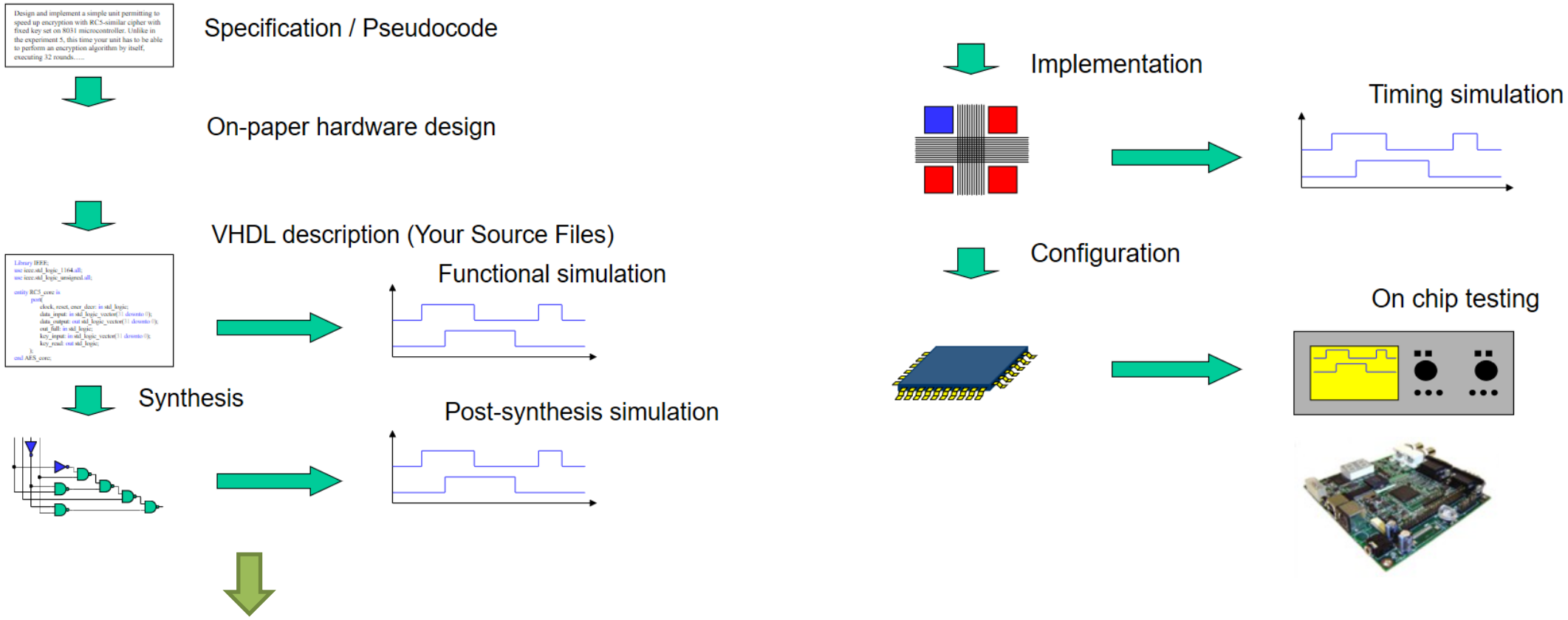
Design and implement a simple unit permitting to speed up encryption with RC5-similar cipher with fixed key set on 8031 microcontroller. Unlike in the experiment 5, this time your unit has to be able to perform an encryption algorithm by itself, executing 32 rounds.....
Specification / Pseudocode
On-paper hardware design
VHDL description (Your Source Files)
Functional simulation
Synthesis
Post-synthesis simulation
Implementation
Timing simulation
Configuration
On chip testing

Synthesis

```
architecture MLU_DATAFLOW of MLU is

signal A1:STD_LOGIC;
signal B1:STD_LOGIC;
signal Y1:STD_LOGIC;
signal MUX_0, MUX_1, MUX_2, MUX_3: STD_LOGIC;

begin
        A1<=A when (NEG_A='0') else
                not A;
        B1<=B when (NEG_B='0') else
                not B;
        Y<=Y1 when (NEG_Y='0') else
                not Y1;

        MUX_0<=A1 and B1;
        MUX_1<=A1 or B1;
        MUX_2<=A1 xor B1;
        MUX_3<=A1 xnor B1;

        with (L1 & L0) select
                Y1<=MUX_0 when "00",
                        MUX_1 when "01",
                        MUX_2 when "10",
                        MUX_3 when others;

end MLU_DATAFLOW;
```

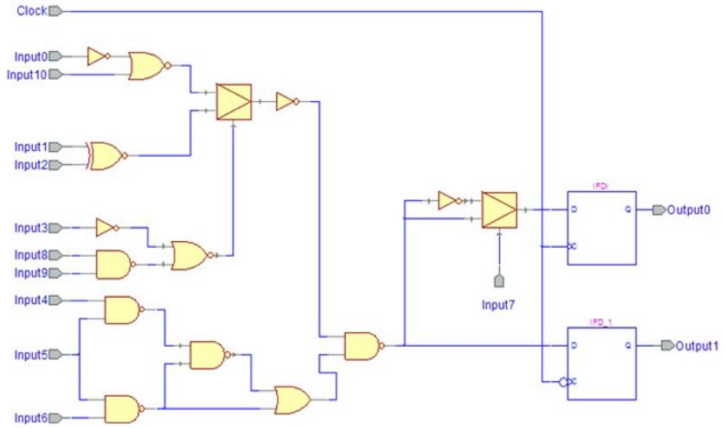

Circuit netlist

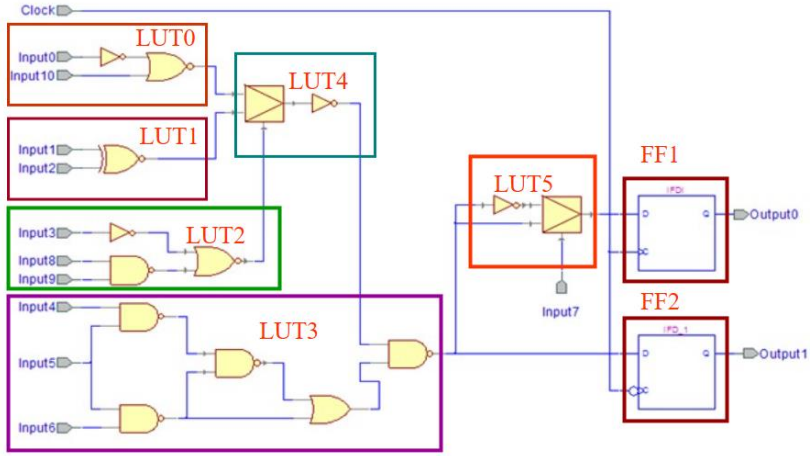

Mapping

Placing

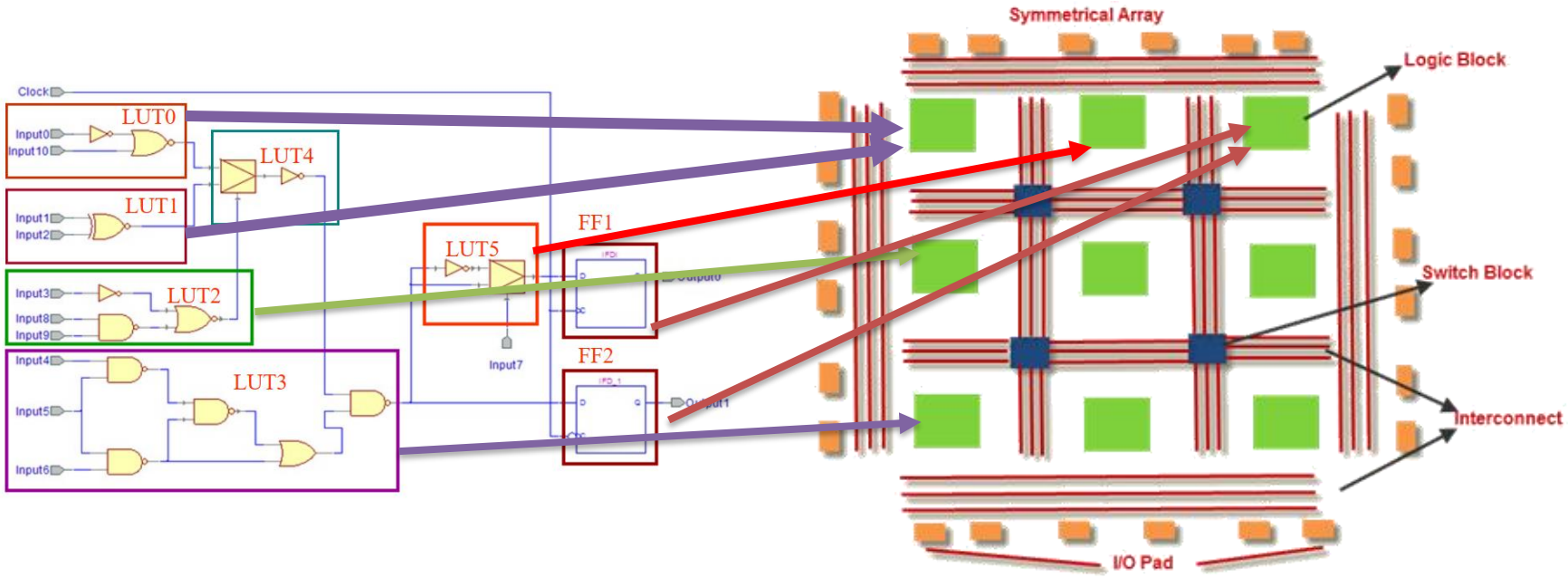
Clock
LUT0
Input0
Input10
LUT4
LUT1
Input1
Input2
LUT5
FF1
Input3
LUT2
Input8
Input9
Input7
FF2
Input4
LUT3
Input5
Input6
Symmetrical Array
Logic Block
Switch Block
Interconnect
I/O Pad

Routing

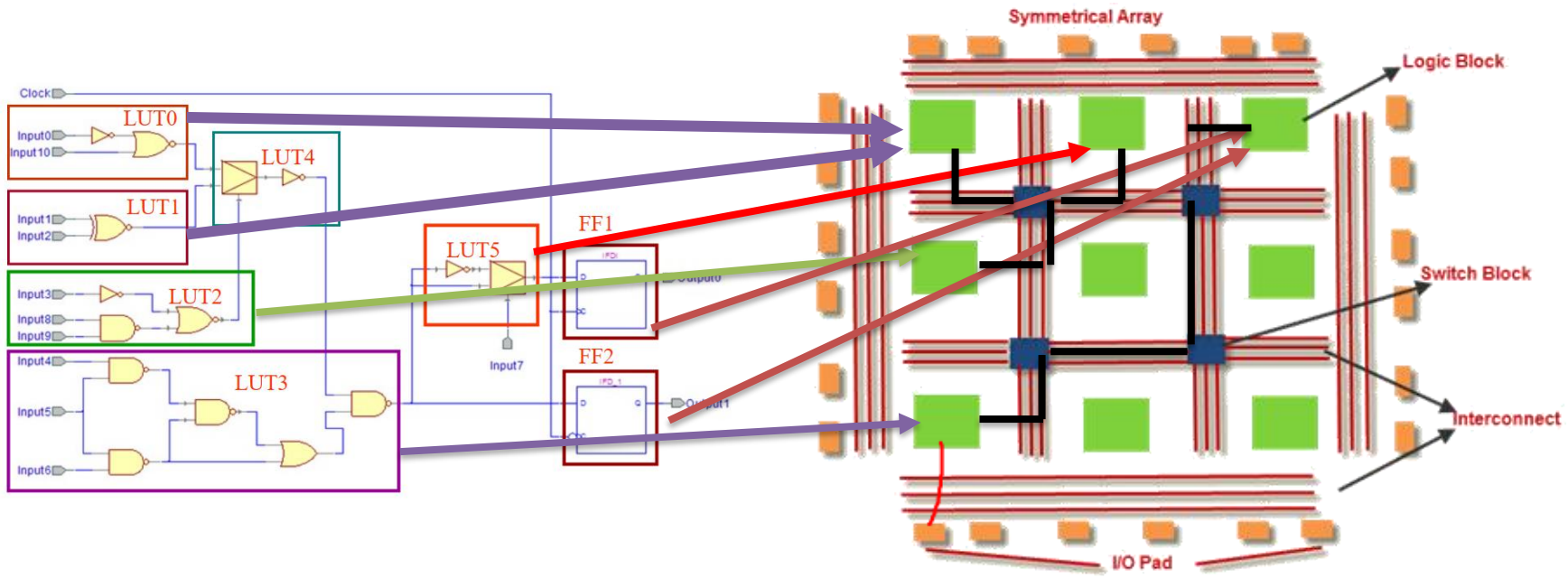
Clock
LUT0
Input0
Input10
LUT4
LUT1
Input1
Input2
LUT5
FF1
Input3
LUT2
Input8
Input9
Input7
FF2
Input4
LUT3
Input5
Input6
Symmetrical Array
Logic Block
Switch Block
Interconnect
I/O Pad

Configuration

- Once a design is implemented, the synthesis tool generates a file that the FPGA can understand
- This file is called a bit stream: a BIT file (.bit extension)
- The BIT file can be downloaded directly to the FPGA, or can be converted into a PROM file which stores the programming information

Complex Programmable Logic Device (CPLD)

- Similar to FPGA architecture but with fewer logic blocks and more interconnect
- Logic Block signals only connected to the neighboring Logic block (predictable end to end delay)
- Nonvolatile logic cells (based on EEPROM Flash), on when powered.
- CPLDs implement sum-of-product style logic not LUT as in FPGA.
- Good for simple applications and cheaper.

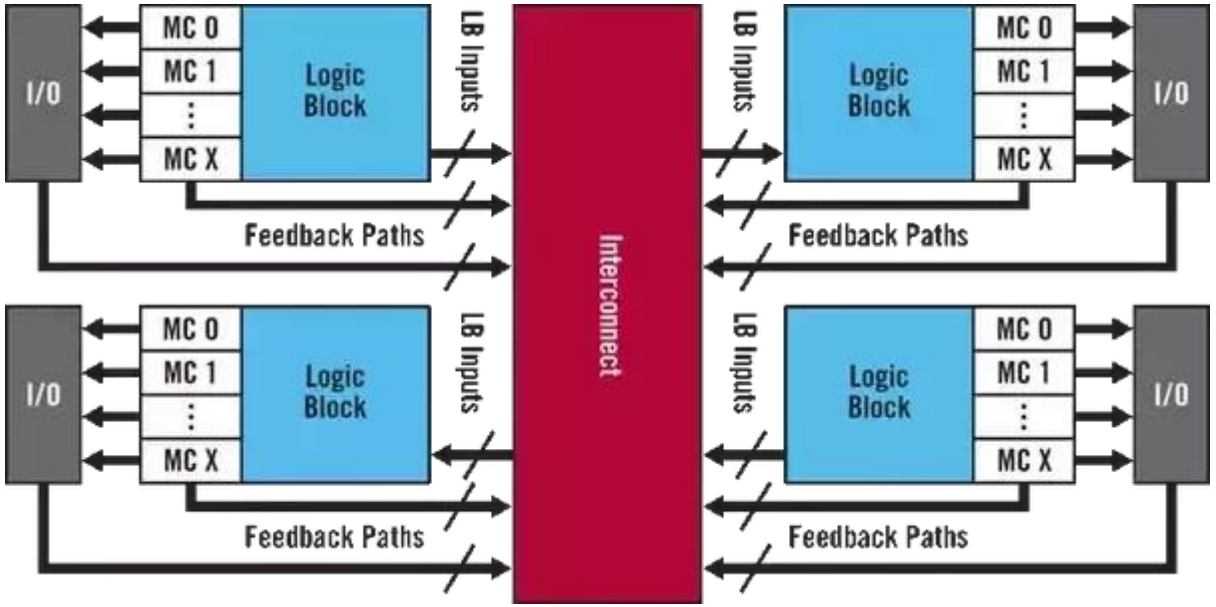

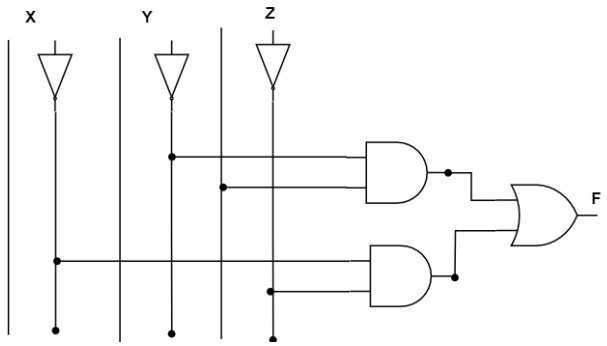

Assignment 2

- Individual practical work

Submission Details

- Submission platform: Itslearning → Assignments
- File format: PDF
- Deadline: 20/04/2026, before 23:59
- Page limit: Maximum 3 pages
- Minimum font size: 10 pt

Assignment 2: Electronic Door Lock on FPGA (Individual work)

Aim: FPGA programming and interfacing.

Design and implement a digital circuit that receives input from a keypad and operates in two distinct modes: **Locked** and **Unlocked**. The current mode should be indicated using an LED.

When the system is in the **Locked** mode, the digits entered through the keypad must be interpreted as an unlocking code. Once the correct code has been entered, the system transitions into the **Unlocked** mode. All entered digits should be displayed on a **7-segment display**.

When the system is in the **Unlocked** mode, pressing the **✱ (star)** key or **waiting 30 seconds** should return the circuit to the **Locked** mode.

Hint: To ensure stable operation with the keypad, consider using a low clock frequency (below 10 kHz).

You must simulate the complete circuit using pad_mod_behav.vhd.
After a successful simulation, implement the design on the FPGA, connect the provided keypad, and verify that the 7-segment display and LED respond correctly.

Bonus (Optional):

Improve the energy efficiency of the keypad encoder so that the internal counter does not run continuous when no key is pressed.
Example reference: https://www.youtube.com/watch?v=h-NM1xSSzHQ

Documentation Requirements

Your report should include:

- **Description of the components used**
- **Explanation of the circuit's functionality**
- **Validation strategy and results**

Use relevant **code excerpts**, **simulator screenshots**, and **photos of the FPGA setup** to illustrate your work. Additionally, create a **YouTube video** demonstrating the system in action.